Low-cost space-saving lubrication system for small machinery

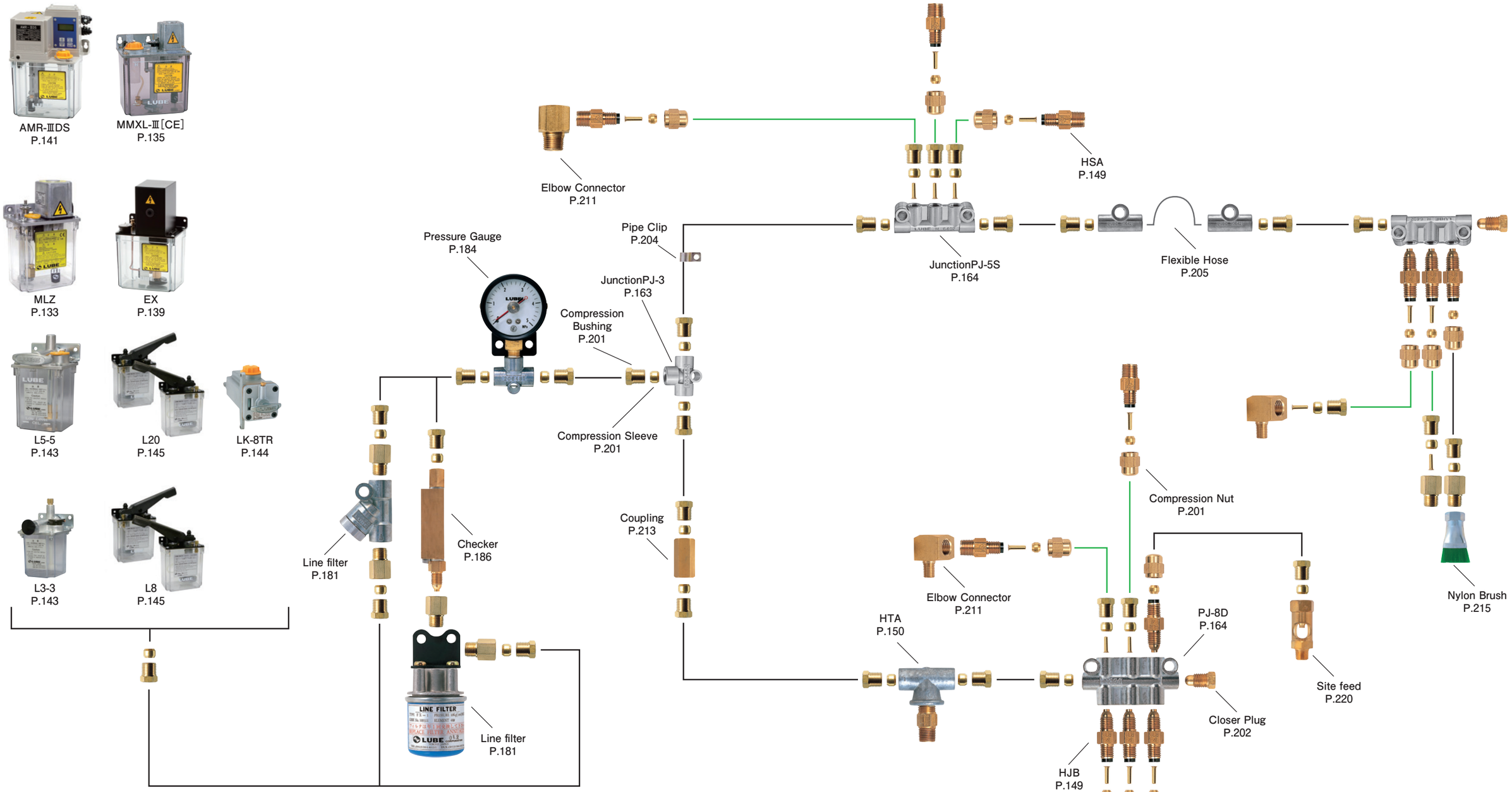

● Related Products

LRA Analysis
p.226

●TubingType
——— φ4Steel Pipe
——— φ4Nylon Pipe